Sipeed Longan Nano Datasheet

v1.0

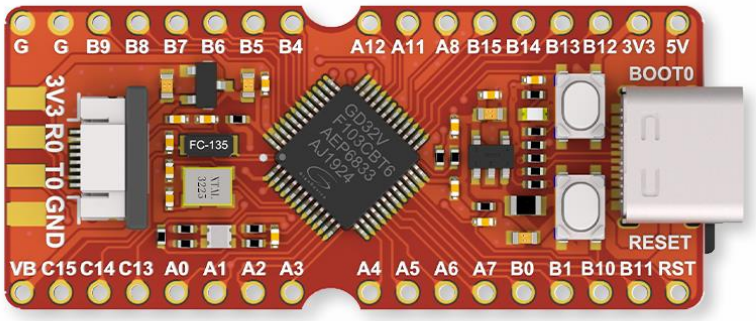

Key Features:

- Chip built-in 128KB Flash, 32KB SRAM
- 4 x general purpose 16-bit timer, 2 x basic 16-bit timer, 1 x advanced 16-bit timer
- Watchdog, RTC, Systick
- 3 x USART, 2 x I2C, 3 x SPI, 2 x I2S, 2 x CAN, 1 x USBFS (OTG)
- 2 x ADC (10 channel), 2 x DAC

UPDATE	
V1.0	Edited on August 28, 2019 ; Original document

SPECIFICATION	
CPU :	GD32VF103CBT6 based on RISC-V 32-bit core
Kernel power consumption:	Only 1/3 of the traditional Cortex-M3
Chip built-in:	128KB Flash, 32KB SRAM
Peripheral:	4 x general purpose 16-bit timer, 2 x basic 16-bit timer, 1 x advanced 16-bit timer, Watchdog, RTC, Systick 3 x USART, 2 x I2C, 3 x SPI, 2 x I2S, 2 x CAN, 1 x USBFS (OTG), 2 x ADC (10 channel), 2 x DAC

SOFTWARE FEATURES	
IDE	PlatformIO IDE, support debugging, arduino
Compile Toolchain & Debugger	GCC、OpenOCD
Operating system	RT-Thread、LiteOS

HARDWARE FEATURES	
Crystal	8MHz Passive High Speed Crystal +32.768KHz Low Speed RTC Crystal
Connector	Double row 2.54 pitch pin
Storage expansion	short body TF card slot
Display Expansion	8pin 0.5mm FPC Block Expansion 160x80 RGB IPS LCD (SPI Interface)
Debug interface	2x4 pin leads to JTAG debug interface

SIZE	
Length	46.1mm
Width	20mm

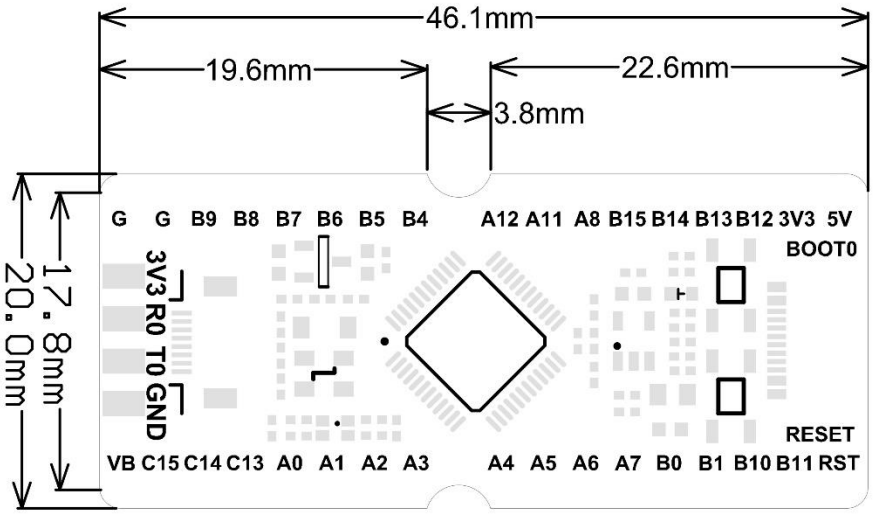

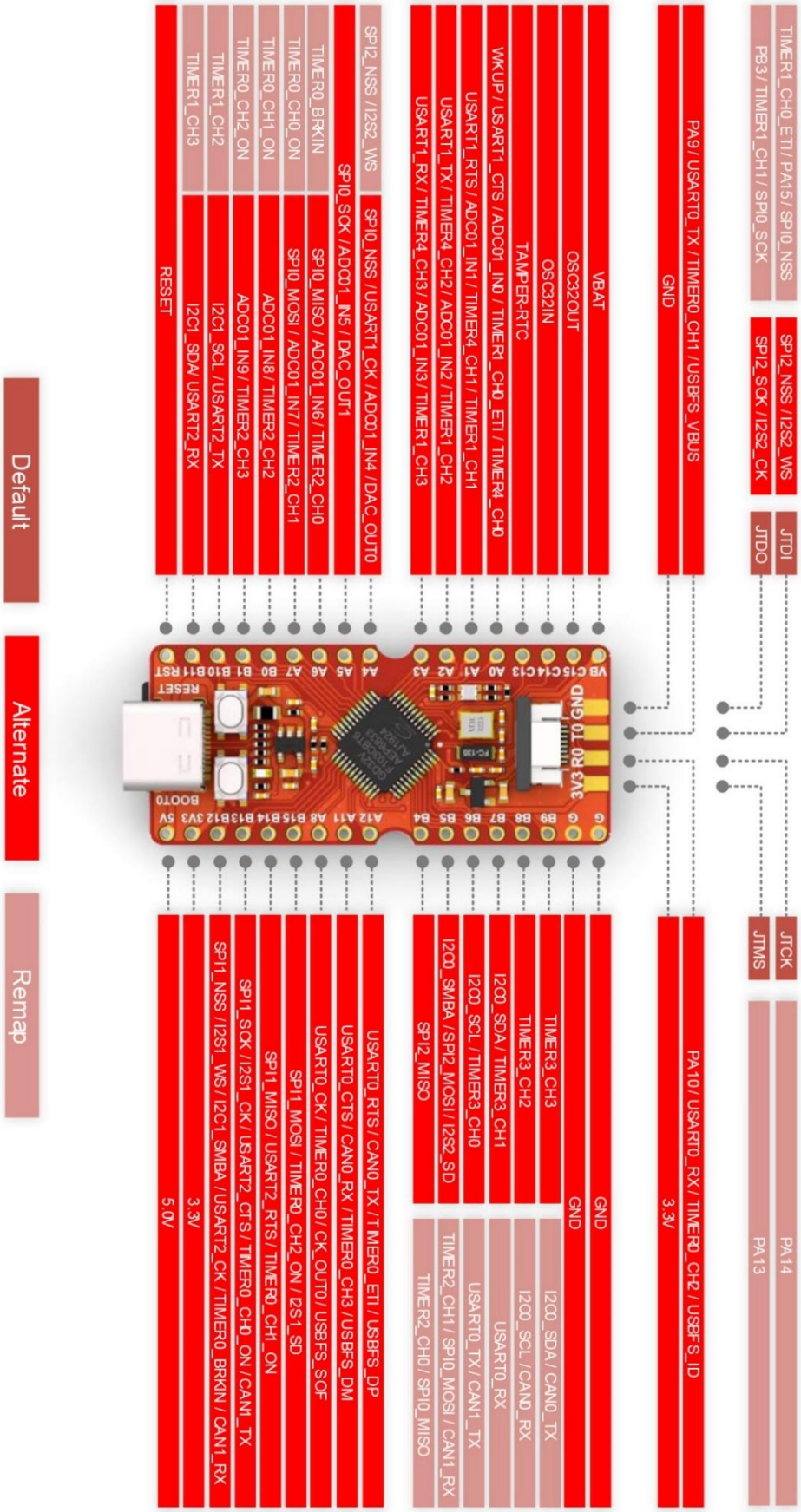
TIMER1_CH0_ETI / PA15 / SPI0_NSS
PB3 / TIMER1_CH1 / SPI0_SCK
SPI2_NSS / I2S2_WS
SPI2_SCK / I2S2_CK
JTDI
JTDO
PA9 / USART0_TX / TIMER0_CH1 / USBFS_VBUS
GND
VBAT
OSC32OUT
OSC32IN
TAMPER-RTC
WKUP / USART1_CTS / ADC01_IN0 / TIMER1_CH0_ETI / TIMER4_CH0
USART1_RTS / ADC01_IN1 / TIMER4_CH1 / TIMER1_CH1
USART1_TX / TIMER4_CH2 / ADC01_IN2 / TIMER1_CH2
USART1_RX / TIMER4_CH3 / ADC01_IN3 / TIMER1_CH3
SPI2_NSS / I2S2_WS
SPI0_NSS / USART1_CK / ADC01_IN4 / DAC_OUT0
SPI0_SCK / ADC01_IN5 / DAC_OUT1
TIMER0_BRKIN
SPI0_MISO / ADC01_IN6 / TIMER2_CH0
TIMER0_CH0_ON
SPI0_MOSI / ADC01_IN7 / TIMER2_CH1
TIMER0_CH1_ON
ADC01_IN8 / TIMER2_CH2
TIMER0_CH2_ON
ADC01_IN9 / TIMER2_CH3
TIMER1_CH2
I2C1_SCL / USART2_TX
TIMER1_CH3
I2C1_SDA/ USART2_RX
RESET
PA14
PA13
JTCK
JTMS
PA10 / USART0_RX / TIMER0_CH2 / USBFS_ID
3.3V
GND
GND
TIMER3_CH3
TIMER3_CH2
I2C0_SDA / TIMER3_CH1
I2C0_SCL / TIMER3_CH0
I2C0_SMBA / SPI2_MOSI / I2S2_SD
SPI2_MISO
I2C0_SDA / CAN0_TX
I2C0_SCL / CAN0_RX
USART0_RX
USART0_TX / CAN1_TX
TIMER2_CH1 / SPI0_MOSI / CAN1_RX
TIMER2_CH0 / SPI0_MISO
USART0_RTS / CAN0_TX / TIMER0_ETI / USBFS_DP
USART0_CTS / CAN0_RX / TIMER0_CH3 / USBFS_DM
USART0_CK / TIMER0_CH0 / CK_OUT0 / USBFS_SOF
SPI1_MOSI / TIMER0_CH2_ON / I2S1_SD
SPI1_MISO / USART2_RTS / TIMER0_CH1_ON
SPI1_SCK / I2S1_CK / USART2_CTS / TIMER0_CH0_ON / CAN1_TX
SPI1_NSS / I2S1_WS / I2C1_SMBA / USART2_CK / TIMER0_BRKIN / CAN1_RX
3.3V
5.0V
Default
Alternate
Remap

RESOURCES	
Official Website	www.sipeed.com
Github	https://github.com/ sipeed i
BBS	http://bbs.sipeed.com
SDK	dl.sipeed.com/ LONGAN/Nano/SDK
HDK	dl.sipeed.com/ LONGAN/Nano/HDK
E-mail(Technical Support)	support@sipeed.com
telgram link	https://t.me/sipeed
Longan RV QQ Group	816177882
Longan wiki	longan.sipeed.com
Download	http://dl.sipeed.com/LONGAN/Nano/

Disclaimer and copyright notice

The information in this document, including the URL address for reference, is subject to change without notice.

The documentation is provided by Sipeed without warranty of any kind, including any warranties of merchantability, and any proposal, specification or sample referred to elsewhere. This document is not intended to be a liability, including the use of information in this document to infringe any patent rights.

Copyrights © 2019 Sipeed Limited. All rights reserved.